KAMIAH SKATEPARK

KAMIAH / ID

VICINITY MAP

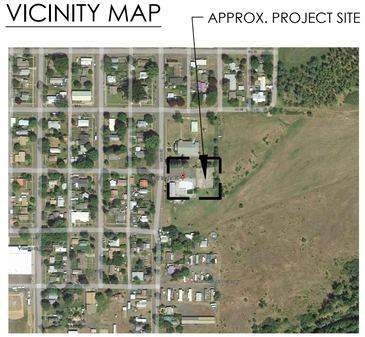

SITE ADDRESS

807 Idaho Street, Kamiah, ID

SHEET INDEX

SP1.0	TITLE SHEET
SP1.1	CONCEPTUAL RENDERINGS
C1.0	STORM DRAINAGE PLAN
C1.1	STORM DETAILS
SP1.2	PHASE PLAN
SP1.3	SITE PLAN
SP1.4	COPING MATERIALS PLAN
SP1.5	CONCRETE MATERIALS PLAN
SP1.6	CONCRETE JOINTS
SP1.7	DIMENSIONS PLAN
SP2.0	SECTIONS KEY
SP2.1	SECTIONS & KEY
SP2.2	SECTIONS & KEY
SP2.3	SECTIONS & KEY
SP2.4	SECTIONS & KEY
SP2.5	SECTIONS & KEY
SP3.1	DETAILS
SP3.2	DETAILS

PROJECT INFORMATION

CONTACTS

OWNER: CITY OF KAMIAH

CONTACT:

MIKE STANTON

CITY OF KAMIAH PUBLIC WORKS DIRECTOR

PHONE: (360) 281-0968

LEGAL DESCRIPTION

THE PROPERTY IS OWNED BY THE CITY OF KAMIAH.

SKATEPARK DESIGNER:

GRINDLINE SKATEPARKS INC.

CONTACT:

MATT FLUEGGE

PHONE: 206 612 3401

EMAIL: MATT@GRINDLINE.COM

RENDERING FOR REFERENCE ONLY- NOT FOR CONSTRUCTION

GENERAL NOTES:

1. CONTRACTOR SHALL INSTALL ALL IMPROVEMENTS IN ACCORDANCE WITH THE (CITY) BUILDING CODES AND THE 2012 IBC.
2. CONTRACTOR SHALL READ THESE PLANS AND NOTES ENTIRELY AND BRING ANY DISCREPANCIES TO GRINDLINE SKATEPARKS INC. IMMEDIATELY.
3. CONTRACTOR SHALL VISIT THE SITE AND VERIFY EXISTING CONDITIONS BEFORE SUBMITTAL OF A CONSTRUCTION BID.
4. IT IS THE CONTRACTOR'S RESPONSIBILITY TO LOCATE ALL UTILITIES, SEWERS, WATER LINES, ETC. CALL BEFORE YOU DIG 811.
5. IF ANY UTILITIES OF FACILITIES CONFLICT WITH THE PROPOSED IMPROVEMENTS, ALL WORK SHALL STOP IMMEDIATELY AND THE UTILITY COMPANY SHALL BE NOTIFIED.
6. IT SHALL BE THE RESPONSIBILITY OF THE CONTRACTOR TO LOCATE ALL SUBSTRUCTURES WITHIN THE AREA OF PROPOSED IMPROVEMENTS, AND IN THE EVENT OF DAMAGE, HE SHALL BEAR THE TOTAL COST OF REPAIR OR REPLACEMENT.
7. THE CONTRACTOR WILL PROVIDE ALL LABOR, MATERIALS, TRANSPORTATION, AND SERVICES NECESSARY TO FURNISH AND INSTALL ALL CONSTRUCTION ELEMENTS AS SHOWN IN THESE PLANS AND NOTES.
8. THE CONTRACTOR SHALL OBTAIN, COORDINATE, AND PAY FOR ALL PERMITS, FEES, AND AGENCY INSPECTIONS AS REQUIRED.
9. ALL WORK SHALL BE GUARANTEED BY THE CONTRACTOR AS TO MATERIALS AND WORKMANSHIP FOR A PERIOD OF ONE YEAR FOLLOWING THE DATE OF THE FINAL ACCEPTANCE OF THE PROJECT. THE CONTRACTOR SHALL PROVIDE A WRITTEN GUARANTEE ON HIS LETTERHEAD AT THE TIME OF FINAL INSPECTION.
10. ALL DIMENSIONS ARE TAKEN FROM CURB FACE OR EDGE OF PAVING, UNLESS NOTED OTHERWISE ON PLANS. THE DIMENSIONS ARE SHOWN FOR APPROXIMATE LINE, AND ALL RADII, CURVES, AND SURFACES ARE TO HAVE EXTREMELY SMOOTH TRANSITIONS WITH ABSOLUTELY NO ABRUPT CHANGES OR BENDS.
11. ALL FORMS AND ALIGNMENT OF PAVING SHALL BE REVIEWED BY AN INSPECTOR PRIOR TO POURING. NOTIFICATION WILL BE GIVEN WITH AT LEAST 48 HOURS NOTICE.
12. FOR SITE GRADING, SEE SITE PLAN PROVIDED FOR APPROXIMATE SLAB ELEVATIONS. REFER TO SECTION DRAWINGS FOR VERTICAL CONTROLS OF SKATEPARK FEATURES. MAINTAIN POSITIVE DRAINAGE WITHIN NEW AND EXISTING SLABS. FIELD FIT AS NECESSARY.
13. THE DRAWINGS AND SPECIFICATIONS REPRESENT THE FINISHED STRUCTURE. ALL BRACING, TEMPORARY SUPPORTS, SHORING, ETC. ARE THE SOLE RESPONSIBILITY OF THE CONTRACTOR. SITE INSPECTIONS DO NOT INCLUDE THE INSPECTION OF CONSTRUCTION METHODS AND SAFETY CONDITIONS AT THE WORK SITE. THESE VISITS SHALL NOT BE CONSTRUED AS CONTINUOUS AND DETAILED INSPECTIONS.
14. DESIGN MATERIALS, EQUIPMENT, AND PRODUCTS OTHER THAN THOSE DESCRIBED OR INDICATED ON THE DRAWINGS MAY BE CONSIDERED FOR USE, PROVIDED PRIOR APPROVAL IS OBTAINED FROM THE OWNER, GRINDLINE SKATEPARKS INC. AND THE APPLICABLE GOVERNING CODE AUTHORITY.

GRINDLINE
CONCRETE SKATEPARK DESIGN & CONSTRUCTION
4619 14th Ave SW
Seattle WA 98106
P: 206.932.5244 F: 206.932.6840
www.grindline.com

STATE OF IDAHO
REGISTERED LANDSCAPE ARCHITECT
BRYAN ANTHONY COLE
LA-16718

SCALE: N.T.S.

TITLE SHEET

PROJECT: KAMIAH SKATEPARK
LOCATION: KAMIAH, ID

SHEET: SP1.0

DATE: 07.25.22

DRAWN BY: BAJ
CHECKED BY: MBF

This design is an instrument of professional service and is the property of Grindline Skateparks Inc. Any use of these plans shall be restricted to the project for which they were prepared.

RENDERINGS FOR REFERENCE ONLY- NOT FOR CONSTRUCTION

GRINDLINE
CONCRETE SKATEPARK DESIGN & CONSTRUCTION
4619 14th Ave SW
Seattle WA 98106
P. 206.932.6414 F. 206.932.6840
www.grindline.com

STATE OF IDAHO
BRYAN ANTHONY COLE
LA-16718
LICENSED LANDSCAPE ARCHITECT

SCALE:

CONCEPTUAL RENDERINGS

PROJECT: KAMIAH SKATEPARK
LOCATION: KAMIAH, ID

SHEET:
SP1.1

DATE: 07.25.22

DRAWN BY: BAJ
CHECKED BY: MBF

This design is an instrument of professional service and is the property of Grindline Skateparks Inc. Any use of these plans shall be restricted to the project for which they were prepared.

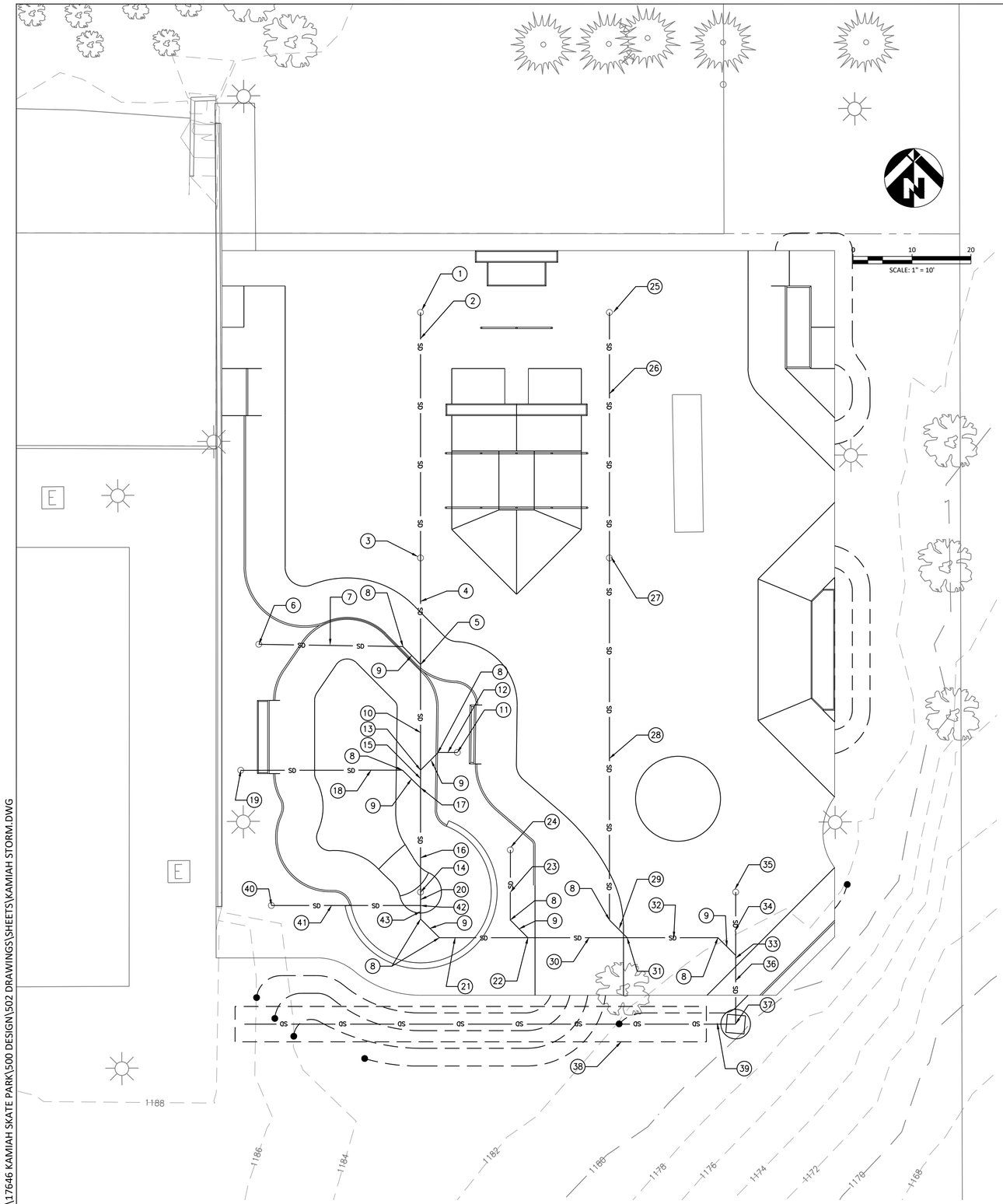

STORM NOTES:

1. FLOOR DRAIN #1
PER DETAIL 6, SHEET SP3.1
RIM 1181.50
6" IE 1179.50 OUT (S)
2. 6" SDR-35 STORM, L=42' S=0.0177
3. FLOOR DRAIN #2
PER DETAIL 6, SHEET SP3.1 WITH 6" SDR-35 TEE
RIM 1181.50
6" IE 1178.76 IN (N)
6" IE 1178.76 OUT (S)
4. 6" SDR-35 STORM, L=18' S=0.0177
5. 6" SDR-35 45° WYE CONNECTION
6" IE 1178.44 IN (N)
6" IE 1178.44 IN (W)
6" IE 1178.44 OUT (S)
6. FLOOR DRAIN #3
PER DETAIL 6, SHEET SP3.1
RIM 1186.75
6" IE 1178.73 OUT (E)
7. 6" SDR-35 STORM, L=24.5' S=0.010
8. 6" SDR-35 45° BEND
9. 6" SDR-35 STORM, L=4.5' S=0.010
10. 6" SDR-35 STORM, L=18' S=0.0177
11. FLOOR DRAIN #4
PER DETAIL 6, SHEET SP3.1
RIM 1186.75
6" IE 1178.20 OUT (W)
12. 6" SDR-35 STORM, L=3.5' S=0.010
13. 6" SDR-35 45° WYE CONNECTION
6" IE 1178.12 IN (N)
6" IE 1178.12 IN (E)
6" IE 1178.12 OUT (S)
14. FLOOR DRAIN #5
PER DETAIL 6, SHEET SP3.1 WITH 6" SDR-35 TEE
RIM 1179.75
6" IE 1177.75 IN (N)
6" IE 1177.75 OUT (S)
15. 6" SDR-35 STORM, L=3' S=0.0177
16. 6" SDR-35 STORM, L=18' S=0.0177
17. 6" SDR-35 45° WYE CONNECTION
6" IE 1178.07 IN (N)
6" IE 1178.07 IN (W)
6" IE 1178.07 OUT (S)
18. 6" SDR-35 STORM, L=27.5' S=0.010
19. FLOOR DRAIN #6
PER DETAIL 6, SHEET SP3.1
RIM 1186.75
6" IE 1178.39 OUT (E)
20. 6" SDR-35 STORM, L=2' S=0.010
21. 6" SDR-35 STORM, L=15' S=0.010
22. 6" SDR-35 45° WYE CONNECTION
6" IE 1177.51 IN (W)
6" IE 1177.51 IN (N)
6" IE 1177.51 OUT (E)
23. 6" SDR-35 STORM, L=12' S=0.010
24. FLOOR DRAIN #7
PER DETAIL 6, SHEET SP3.1
RIM 1186.75
6" IE 1177.68 OUT (S)
25. FLOOR DRAIN #8
PER DETAIL 6, SHEET SP3.1
RIM 1181.50
6" IE 1179.50 OUT (S)
26. 6" SDR-35 STORM, L=42' S=0.020
27. FLOOR DRAIN #9
PER DETAIL 6, SHEET SP3.1 WITH 6" SDR-35 TEE
RIM 1181.50
6" IE 1178.66 IN (N)
6" IE 1178.66 OUT (S)
28. 6" SDR-35 STORM, L=61.5' S=0.020
29. 6" SDR-35 STORM, L=4.5' S=0.020
30. 6" SDR-35 STORM, L=17' S=0.010
31. 6" SDR-35 45° WYE CONNECTION
6" IE 1177.34 IN (W)
6" IE 1177.34 IN (N)
6" IE 1177.34 OUT (E)
32. 6" SDR-35 STORM, L=15.5' S=0.010
33. 6" SDR-35 45° WYE CONNECTION
6" IE 1177.14 IN (W)
6" IE 1177.14 IN (N)
6" IE 1177.14 OUT (S)
34. 6" SDR-35 STORM, L=10.5' S=0.010
35. FLOOR DRAIN #10
PER DETAIL 6, SHEET SP3.1
RIM 1182.00
6" IE 1177.25 OUT (S)
36. 6" SDR-35 STORM, L=11.5' S=0.010
37. STORM MANHOLE TYPE B #1
PER IDOT STD DWG 605-11
RIM 1180.25
6" IE 1177.03 IN (N)
12" IE 1176.73 OUT (W)
38. INFILTRATION TRENCH
6'W X 4'H X 80'L
12" PERFORATED PIPE L=80', S=0.000
SEE DETAIL ON SHEET C1.1
39. 12" SDR-35 STM PIPE L= 5' S=0.000
40. FLOOR DRAIN #11
PER DETAIL 6, SHEET SP3.1
RIM 1186.75
6" IE 1177.98 OUT (E)
41. 6" SDR-35 STORM, L=25' S=0.010
42. 6" SDR-35 TEE
6" IE 1177.73 IN (W)
6" IE 1177.73 IN (N)
6" IE 1177.73 OUT (S)
43. 6" SDR-35 STORM, L=2.5' S=0.010

MacKay Sposito
ENERGY PUBLIC WORKS LAND DEVELOPMENT
www.mackaysposito.com

STATE OF IDAHO
BRYAN ANTHONY COLE
LA-16718
LICENSED LANDSCAPE ARCHITECT

KAMIAH SKATEPARK
KAMIAH, ID

STORM DRAINAGE PLAN

REVISIONS:

JOB NO.:	17646
DATE:	JULY 2022
SCALE:	1"=10'
DESIGNED BY:	TS
DRAWN BY:	TS
CHECKED BY:	BC

100% SET

C1.0

NO. 1 OF 2

FILE: K:\17646 KAMIAH SKATE PARK\500 DESIGN\502 DRAWINGS\SHEETS\KAMIAH STORM.DWG

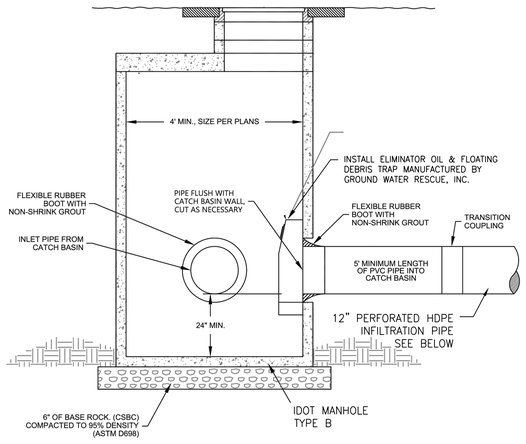

SIDE VIEW 1

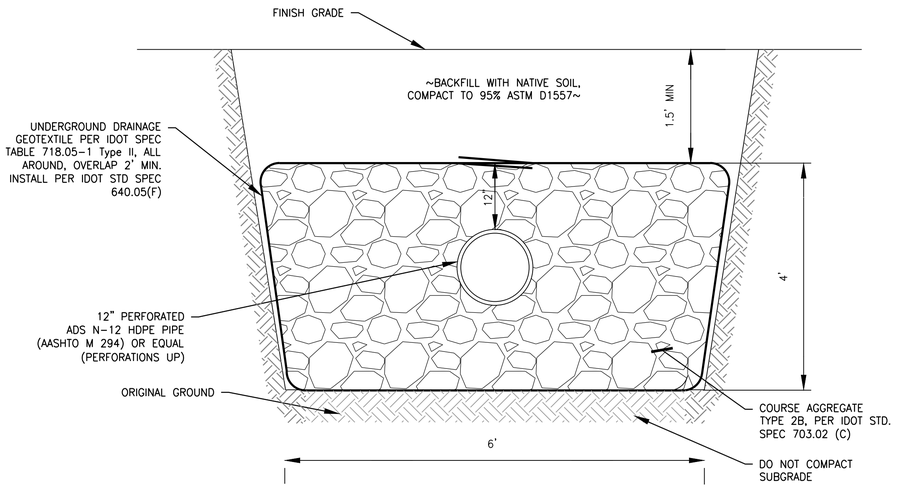

2 **INFILTRATION TRENCH**
NO SCALE

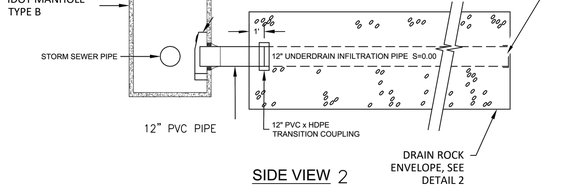

SIDE VIEW 2

1 **STORM MANHOLE TO INFILTRATION TRENCH CONNECTION**
NO SCALE

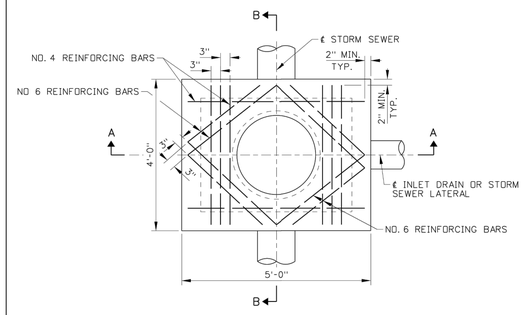

MANHOLE TOP
SECTION C-C
(SCALE ½" = 1")

CONSTRUCTION JOINT DETAIL
(NO SCALE)

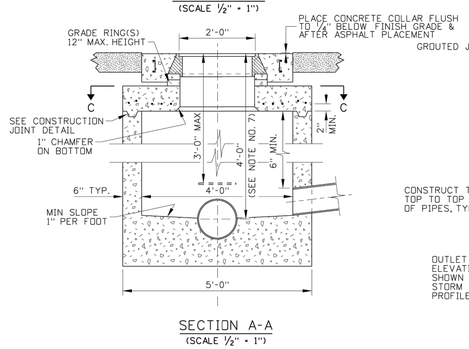

SECTION A-A
(SCALE ½" = 1")

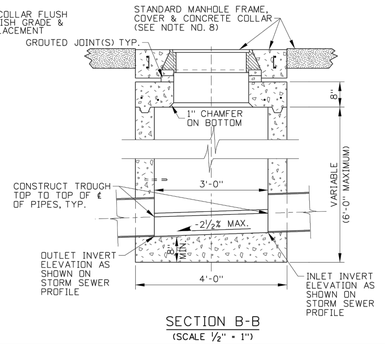

SECTION B-B
(SCALE ½" = 1")

NOTES

1. CARE SHALL BE TAKEN TO AVOID PLACING MANHOLES IN WHEEL PATHS.
2. MANHOLE TYPE B MAY BE EITHER PRECAST OR CAST-IN-PLACE. PRECAST MANHOLES SHALL MEET THE REQUIREMENTS OF ASTM C478. PRIOR APPROVAL OF THE SHOP DRAWING WILL BE REQUIRED ON PRECAST UNITS WITH FLOOR AND/OR PIPE OPENINGS.
3. CAST-IN-PLACE MANHOLE TYPE B SHALL CONFORM TO SECTION 609 - MINOR STRUCTURES OF THE CURRENT ITD STANDARD SPECIFICATIONS FOR HIGHWAY CONSTRUCTION. CAST-IN-PLACE MANHOLES SHALL HAVE 6" WALLS AND MINIMUM 8" FLOORS. THE METAL REINFORCEMENT USED ON THE WALLS AND FLOORS SHALL BE NO. 4 BARS. ALL REINFORCEMENT SHALL HAVE A MINIMUM CONCRETE COVER OF 2" AND/OR 3" IF CAST AGAINST EARTH.
4. ALL CONNECTIONS AND BROKEN AREAS SHALL BE GROUTED SMOOTH TO FORM A WATER TIGHT MANHOLE. MASTIC SEALANTS, GASKETS, USED ON PRECAST SECTION(S) CONSTRUCTION JOINT(S) SHALL CONFORM TO AASHTO AND ASTM REQUIREMENTS.
5. BENDS IN THE MAIN STORM SEWER SHALL BE MADE BY FORMING CURVED CHANNELS WITHIN THE MANHOLE. THE INSIDE OF THE TOP LATERAL PIPES MAY NOT BE LOWER THAN THE INSIDE TOP OF MAIN SEWER PIPES. WHEN THE INVERT OF THE LATERAL PIPE FALLS BELLOW THE 1" PER FOOT MINIMUM SLOPE LINE, THE CHANNEL SHALL BE FORMED FROM THE LATERAL PIPE TO THE MAIN SEWER.
6. THE CONCRETE MANHOLE LIDS SHALL BE DESIGNED FOR AASHTO H-25 LIVE LOADS.
7. WHEN MANHOLE DEPTH IS GREATER THAN 4'-0" INSTALL MANHOLE STEP(S). THE NORMAL STEP-TO-STEP SPACING IS 12" AND THE STEP PROTRUDES FROM THE MANHOLE WALL 4".
8. USE OF A PLASTIC MANHOLE FRAME SUPPORT, I.E. WHIRLY-GIG OR COMPARABLE DEVICE IS AN ACCEPTABLE CONSTRUCTION OPTION (FOR FURTHER INFORMATION REFER TO STANDARD DRAWING 605-13).
9. STANDARD DRAWING 605-13 SHALL ACCOMPANY THIS DRAWING.

REVISIONS									
NO.	DATE	BY	NO.	DATE	BY	NO.	DATE	BY
1	03-64		6	09-04	MSM			
2	04-71		7	05-07	MSM			
3	05-71							
4	12-92	MSM						
5	11-01	MSM						

SCALES SHOWN ARE FOR 11" X 17" PRINTS ONLY

CADD FILE NAME: 605-11_0507.dgn

DRAWING DATE: JUNE, 1961

IDAHO TRANSPORTATION DEPARTMENT

BOISE IDAHO

ORIGINAL SIGNED BY: LOREN THOMAS
ASSISTANT CHIEF ENGINEER (DEVELOPMENT)
ORIGINAL SIGNED BY: STEVEN HUTCHINSON
CHIEF ENGINEER

STANDARD DRAWING

MANHOLE TYPE B

REQUIRES STD. DWG. 605-13

English

STANDARD DRAWING NO. 605-11

SHEET 1 OF 1

ORIGINAL STORED AT: ITD, Headquarters 3311 West State Boise, Idaho

PROFESSIONAL ENGINEER & LAND SURVEYOR REGISTERED 2240 STATE OF IDAHO MILFORD MILLER

FILE: K:\17646 KAMIAH SKATE PARK\500 DESIGN\502 DRAWINGS\SHEETS\KAMIAH STORM.DWG

MacKay Sposito
ENERGY PUBLIC WORKS LAND DEVELOPMENT
www.mackaysposito.com

STATE OF IDAHO BRYAN ANTHONY COLE LA-16718 LICENSED LANDSCAPE ARCHITECT

KAMIAH SKATEPARK
KAMIAH, ID

STORM DETAILS

REVISIONS:

JOB NO.:	17646
DATE:	JULY 2022
SCALE:	AS SHOWN
DESIGNED BY:	TS
DRAWN BY:	TS
CHECKED BY:	BC

100% SET

C1.1

NO. 2 OF 2

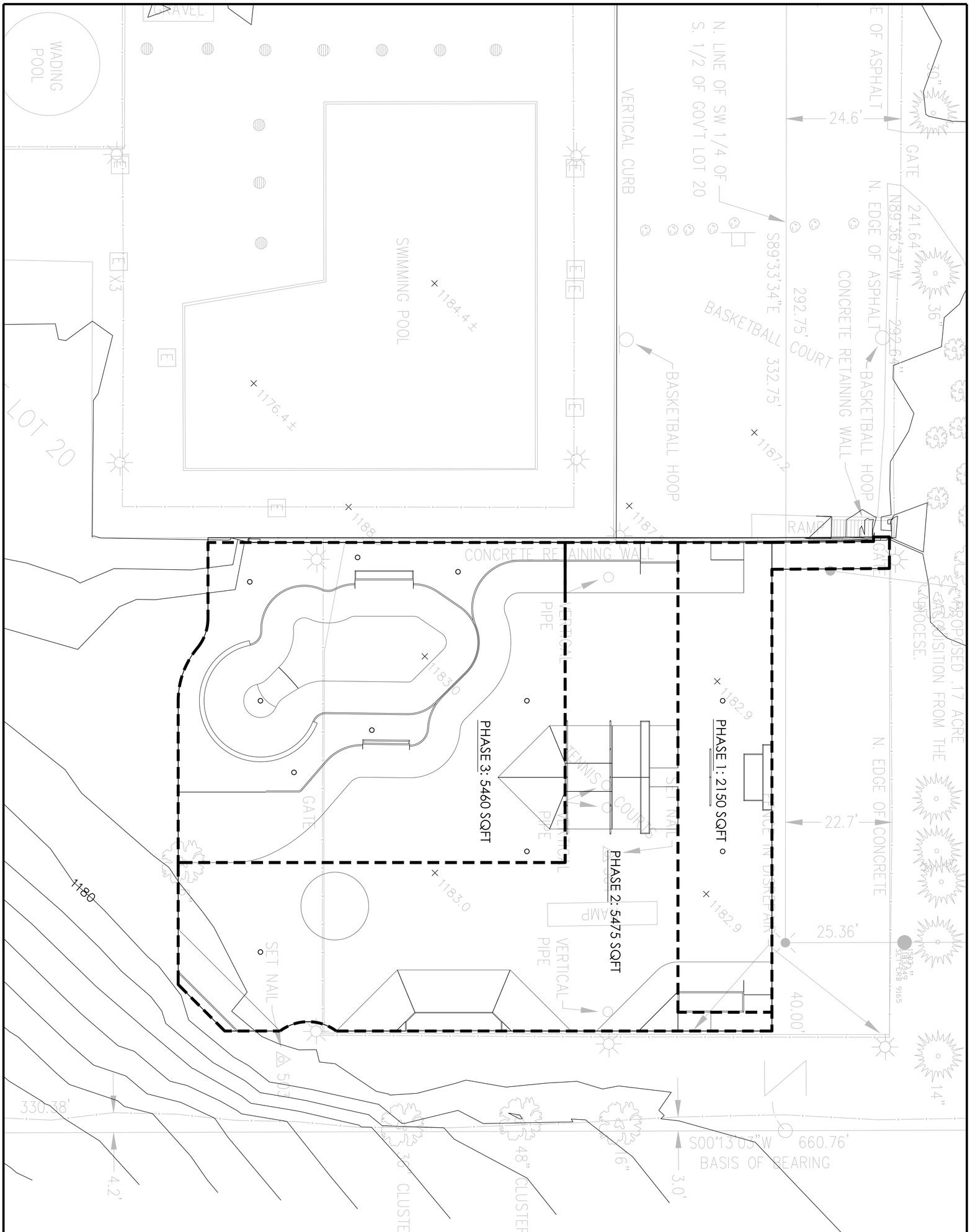

DRAWN BY: BAJ CHECKED BY: ABF	SHEET: SP1.2	CONCEPTUAL RENDERINGS	SCALE:
	DATE: 07.25.22	PROJECT: KAMIAH SKATEPARK LOCATION: KAMIAH, ID	

GRINDLINE
CONCRETE SKATEPARK DESIGN & CONSTRUCTION
4619 14th Ave SW
Seattle WA 98106
P. 206.932.6414 F. 206.932.6840
www.grindline.com

This design is an instrument of professional service and is the property of Grindline Skateparks Inc. Any use of these plans shall be restricted to the project for which they were prepared.

PROPOSED .17 ACRE ACQUISITION FROM THE DIOCESE.

GATE 241.64' N89°36'37"W 292.64'

N. EDGE OF ASPHALT

N. EDGE OF CONCRETE

BASKETBALL HOOP

CONCRETE RETAINING WALL

E OF ASPHALT

24.6'

292.75'

S89°33'34"E 332.75'

N. LINE OF SW 1/4 OF S. 1/2 OF GOV'T LOT 20

BASKETBALL COURT

BASKETBALL HOOP

VERTICAL CURB

CONCRETE RETAINING WALL

TENNIS COURTS

FENCE IN DISREPAIR

SET NAIL

SET CRB 9165

SET NAIL

GATE

VERTICAL PIPE

25.36'

40.00'

3.0'

4.2'

SOUTH BOUNDARY BASIS OF BEARING

30" 36" 14" 36" CLUSTER 48" CLUSTER

1182.00 BB
1184.00 TB
1184.00 EOC
1186.00 TT
1184.00 BB
1185.00 TT
1182.00 BT
1185.00 TT
1182.50 BB
1182.50 BB
1184.50 TB
1182.50 BB
1182.50 BT
1185.50 TT
1185.50 TT
1182.00 RIM
1182.50 BT
1182.50 BT
1187.00 TT
1182.50 BT
1187.00 TT
1186.75 RIM
1190.75 TT
1186.75 RIM
1187.00 TT
1182.25 BT
1187.00 TT
1186.75 RIM
1188.50 TT
1182.50 BT
1186.75 RIM
1187.00 TT
1182.25 BT
1182.00 BT
1186.75 RIM
1187.00 TT
1187.00 EOC
1180.00 BT
1179.75 RIM
1187.00 TT
1187.00 EOC
1187.00 TT
1186.75 RIM
1182.75 BT
1187.00 TT
1187.00 BT
1182.00 BT
1187.00 EOC
1187.00 TT
1182.00 BT
1187.00 EOC
1186.00 TT
1186.00 EOC
1182.00 BT
1187.00 TT
1185.25 TB
1184.00 TB
1184.00 TB
1182.00 EOC
1182.00 BB
1181.75 BB
1182.00 BB
1181.75 BB
1182.00 BB
1181.75 BB
1181.50 RIM
1181.75 BT
1181.50 RIM
1181.75 EOC
1182.00 FS
1181.75 EOC
1181.50 RIM
1181.50 RIM
1184.50 TB
1182.00 BB
1186.00 TT
1185.00 TT
1182.00 BT

1182.9 1183.0 1184.4± 1176.4± 1183.0 1182.9

1184 1183 1182

1186 1185 1184 1183 1182

1188 1186 1184 1182 1180 1180 1178

LEGEND

EOC	EDGE OF CONCRETE
INV	INVERT ELEVATION
RIM	RIM ELEVATION
FS	FINISHED SURFACE
TT	TOP OF TRANSITION
BT	BOTTOM OF TRANSITION
TB	TOP OF BANK
BB	BOTTOM OF BANK
HP	HIGH POINT

WADING POOL

LOT 20

SWIMMING POOL

GRAVEL

E X3

0 5 10 20
SCALE: 1"=10'

NORTH

GRINDLINE
CONCRETE SKATEPARK DESIGN & CONSTRUCTION
4619 146th Ave SW
Lynnwood, WA 98087
P. 206.939.2344 F. 206.932.6840
www.grindline.com

STATE OF IDAHO
BRYAN ANTHONY COLE
LA-16718
LICENSED LANDSCAPE ARCHITECT

SCALE: 1" = 10'

SITE PLAN

PROJECT: KAMIAH SKATEPARK
LOCATION: KAMIAH, ID

SHEET: SP1.3

DATE: 07.25.22

DRAWN BY: BAJ
CHECKED BY: MBF

This design is an instrument of professional service and is the property of Grindline Skateparks Inc. Any use of these plans shall be restricted to the project for which they were prepared.

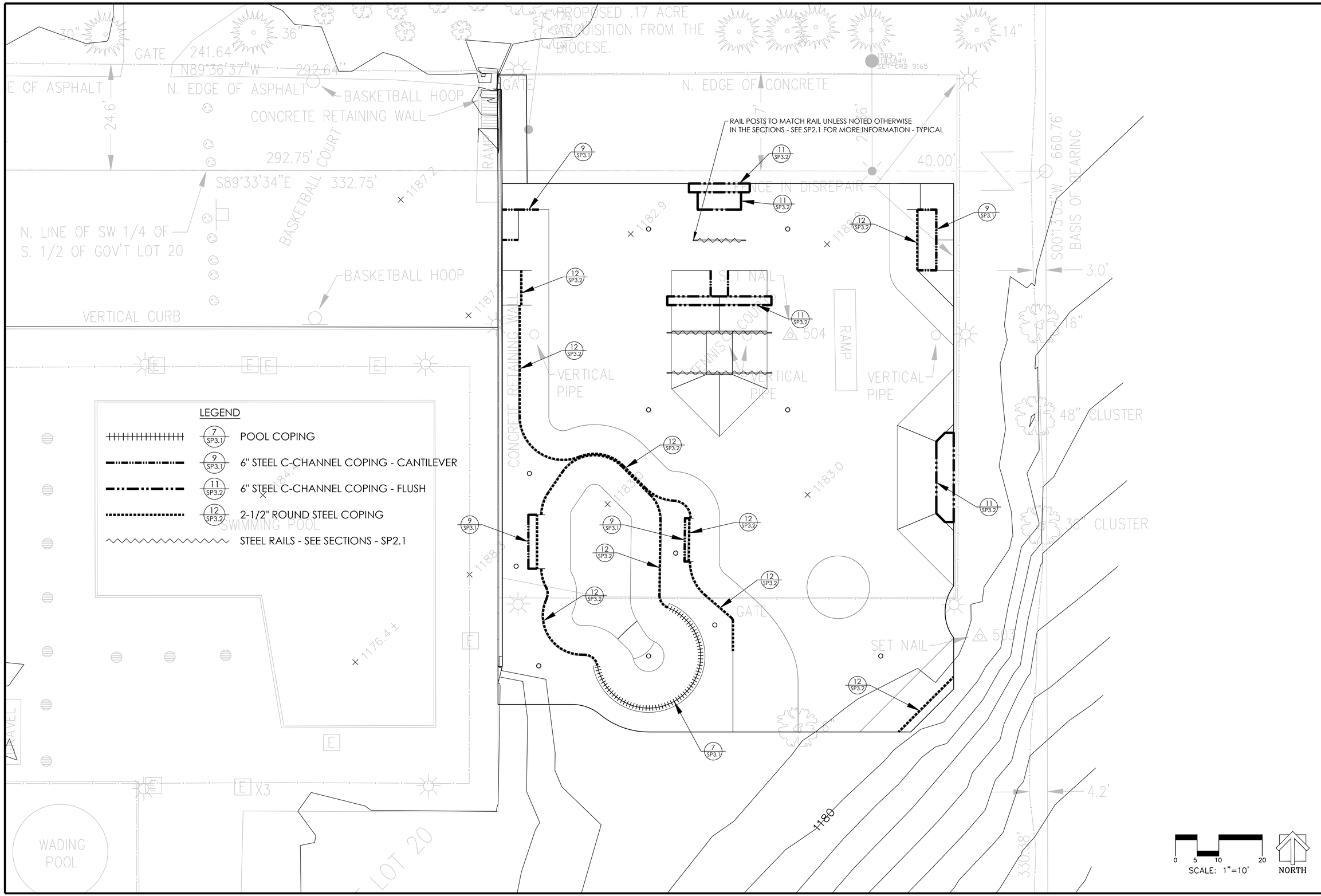

GRINDLINE
CONCRETE SKATEPARK DESIGN & CONSTRUCTION
4619 14th Ave SW
Seattle WA 98106
P. 206.932.6414 F. 206.932.6840
www.grindline.com

STATE OF IDAHO
BRYAN ANTHONY COLE
LA-16718
LICENSED LANDSCAPE ARCHITECT

SCALE: 1" = 10'

COPING MATERIALS PLAN

PROJECT: KAMIAH SKATEPARK
LOCATION: KAMIAH, ID

SHEET: SP1.4

DATE: 07.25.22

DRAWN BY: BAJ
CHECKED BY: MBF

This design is an instrument of professional service and is the property of Grindline Skateparks Inc. Any use of these plans shall be restricted to the project for which they were prepared.

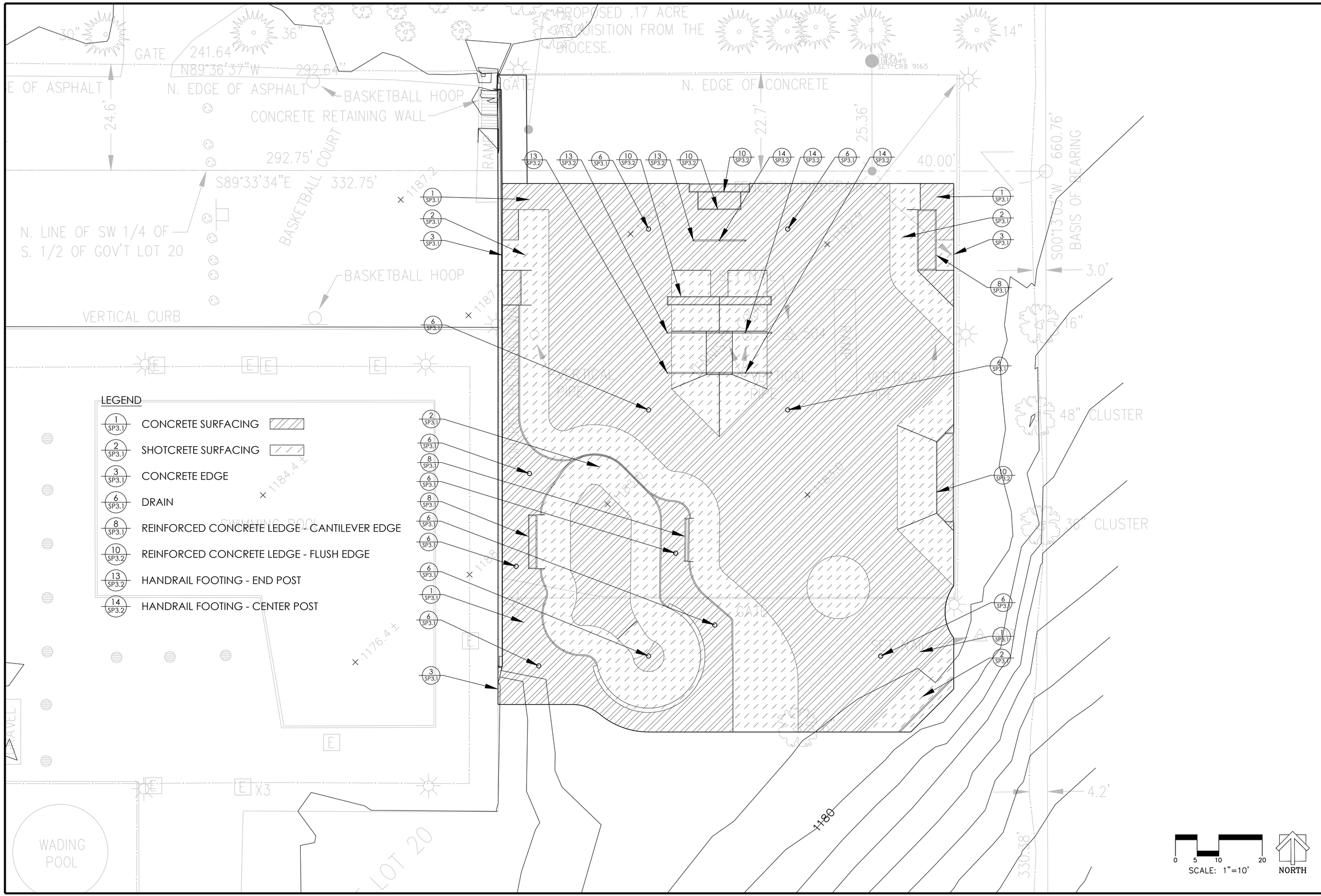

GRINDLINE
CONCRETE SKATEPARK DESIGN & CONSTRUCTION
4619 14th Ave SW
Seattle WA 98106
P. 206.932.6414 F. 206.932.6840
www.grindline.com

STATE OF IDAHO
BRYAN ANTHONY COLE
LA-16718
LICENSED LANDSCAPE ARCHITECT

SCALE: 1" = 10'

CONCRETE MATERIALS PLAN

PROJECT: KAMIAH SKATEPARK
LOCATION: KAMIAH, ID

SHEET: SP1.5

DATE: 07.25.22

DRAWN BY: BAJ
CHECKED BY: MBF

This design is an instrument of professional service and is the property of Grindline Skateparks Inc. Any use of these plans shall be restricted to the project for which they were prepared.

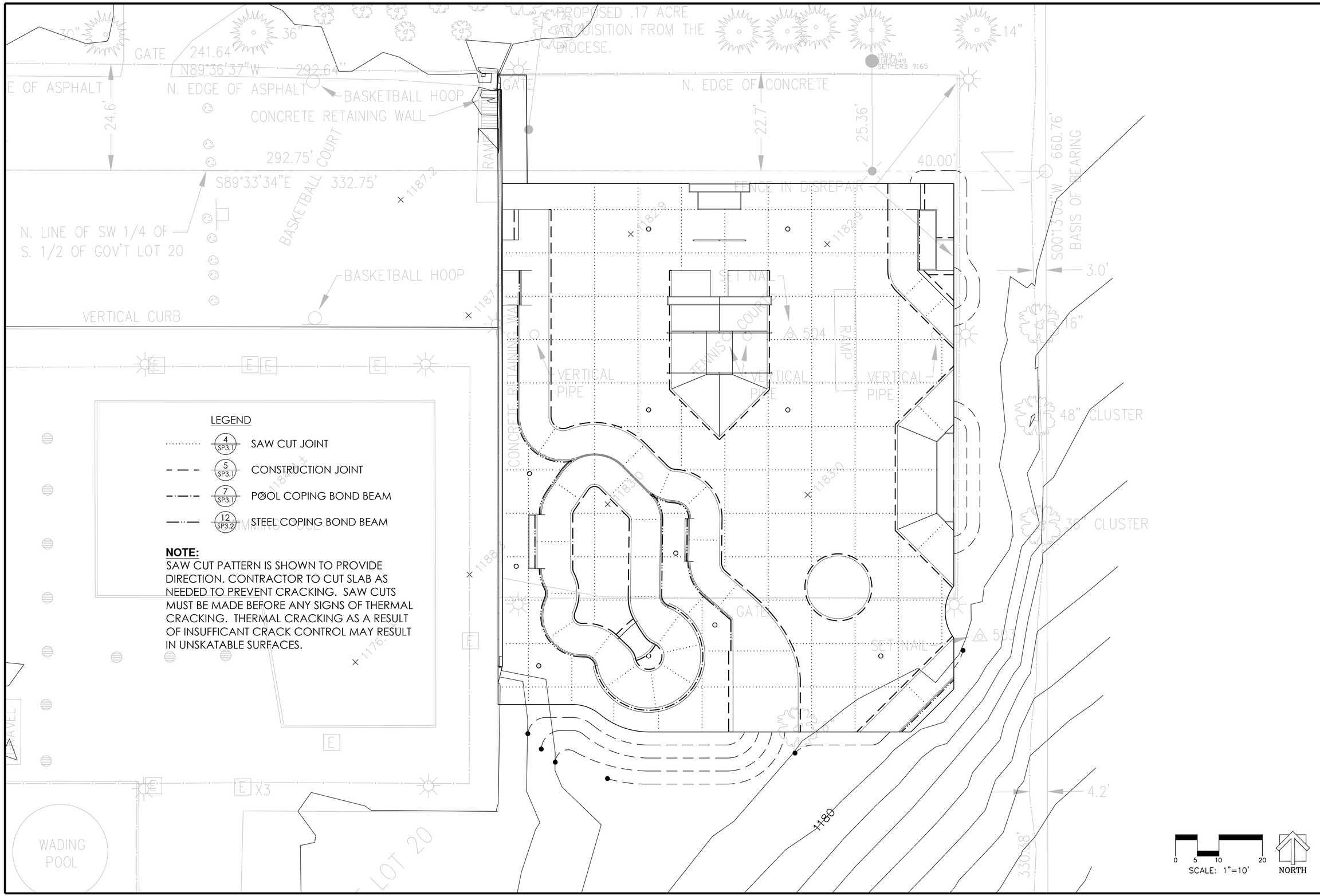

LEGEND

·····	4 / SP3.1	SAW CUT JOINT
— — —	5 / SP3.1	CONSTRUCTION JOINT
—·—·—	7 / SP3.1	POOL COPING BOND BEAM
—··—	12 / SP3.2	STEEL COPING BOND BEAM

NOTE:
SAW CUT PATTERN IS SHOWN TO PROVIDE DIRECTION. CONTRACTOR TO CUT SLAB AS NEEDED TO PREVENT CRACKING. SAW CUTS MUST BE MADE BEFORE ANY SIGNS OF THERMAL CRACKING. THERMAL CRACKING AS A RESULT OF INSUFFICANT CRACK CONTROL MAY RESULT IN UNSKATABLE SURFACES.

0 5 10 20
SCALE: 1"=10'

NORTH

GRINDLINE
CONCRETE SKATEPARK DESIGN & CONSTRUCTION
4619 14th Ave SW
Seattle WA 98106
P. 206.932.6414 F. 206.932.6840
www.grindline.com

STATE OF IDAHO
BRYAN ANTHONY COLE
LA-16718
LICENSED LANDSCAPE ARCHITECT

SCALE: 1" = 10'

CONCRETE JOINTS

PROJECT: KAMIAH SKATEPARK
LOCATION: KAMIAH, ID

SHEET: SP1.6

DATE: 07.25.22

DRAWN BY: BAJ
CHECKED BY: MBF

This design is an instrument of professional service and is the property of Grindline Skateparks Inc. Any use of these plans shall be restricted to the project for which they were prepared.

LEGEND

ARC LENGTH: ◠
RADIUS: R

104'-0"
43'-0" 14'-0" 47'-0"
7'-8"
39'-4"
120'-0"
20'-0"
8'-5"
27'-1"
126'-4"
24'-7"
33'-8"
12'-9"
82'-9"
26'-7"
50'-10"
33'-4"
16'-2" 17'-7" 19'-5" 38'-2" 12'-9"
33'-8" 70'-4"
104'-0"
1180

SCALE: 1"=10'

NORTH

BRAINDLINE
CONCRETE SKATEPARK DESIGN & CONSTRUCTION
4619 14th Ave SW
Seattle, WA 98106
P. 206.932.2444 F. 206.932.6840
www.braindline.com

STATE OF IDAHO
BRYAN ANTHONY COLE
LA-16718
LICENSED LANDSCAPE ARCHITECT

SCALE: 1" = 10'

DIMENSIONS PLAN

PROJECT: KAMIAH SKATEPARK
LOCATION: KAMIAH, ID

SHEET: SP1.7

DATE: 07.25.22

DRAWN BY: BAJ
CHECKED BY: MBF

This design is an instrument of professional service and is the property of Grindline Skateparks Inc. Any use of these plans shall be restricted to the project for which they were prepared.

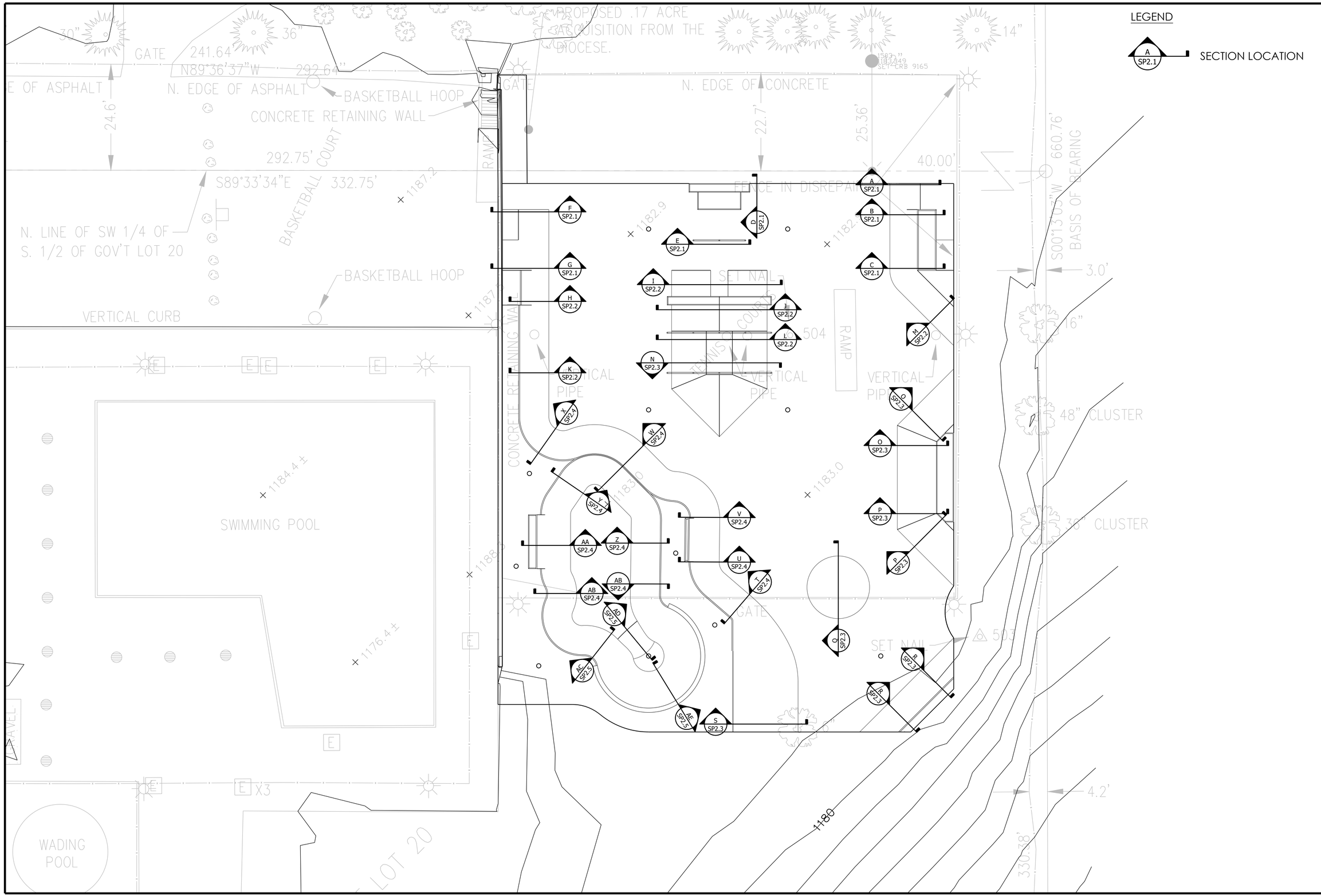

GRINDLINE
CONCRETE SKATEPARK DESIGN & CONSTRUCTION
4619 14th Ave SW
Seattle WA 98106
P. 206.932.6414 F. 206.932.6840
www.grindline.com

STATE OF IDAHO
BRYAN ANTHONY COLE
LA-16718
LICENSED LANDSCAPE ARCHITECT

SCALE: 1" = 3'

SECTIONS AND KEY

PROJECT: KAMIAH SKATEPARK
LOCATION: KAMIAH, ID

SHEET: SP2.0

DATE: 07.25.22

DRAWN BY: BAJ
CHECKED BY: MBF

This design is an instrument of professional service and is the property of Grindline Skateparks Inc. Any use of these plans shall be restricted to the project for which they were prepared.

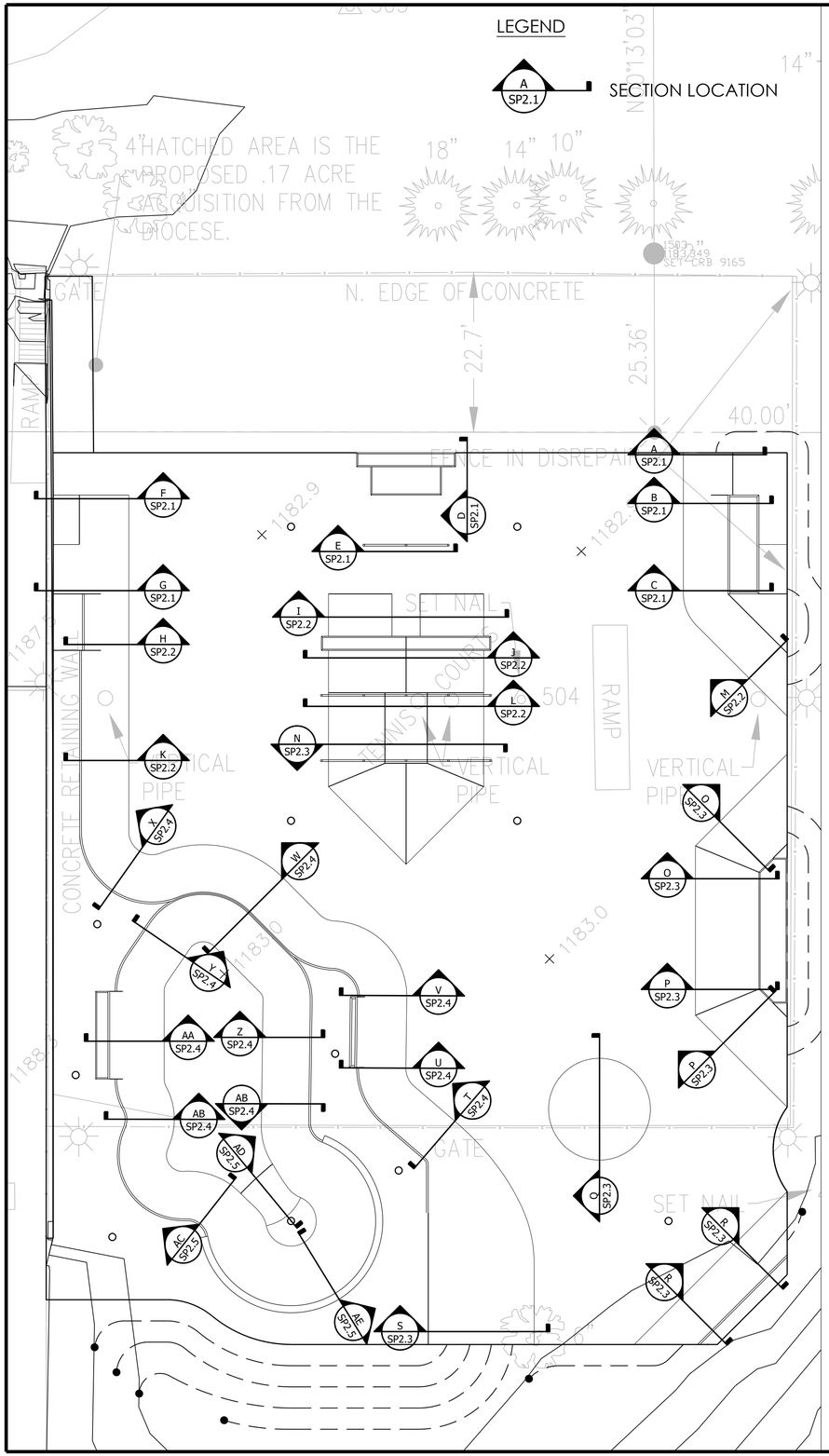

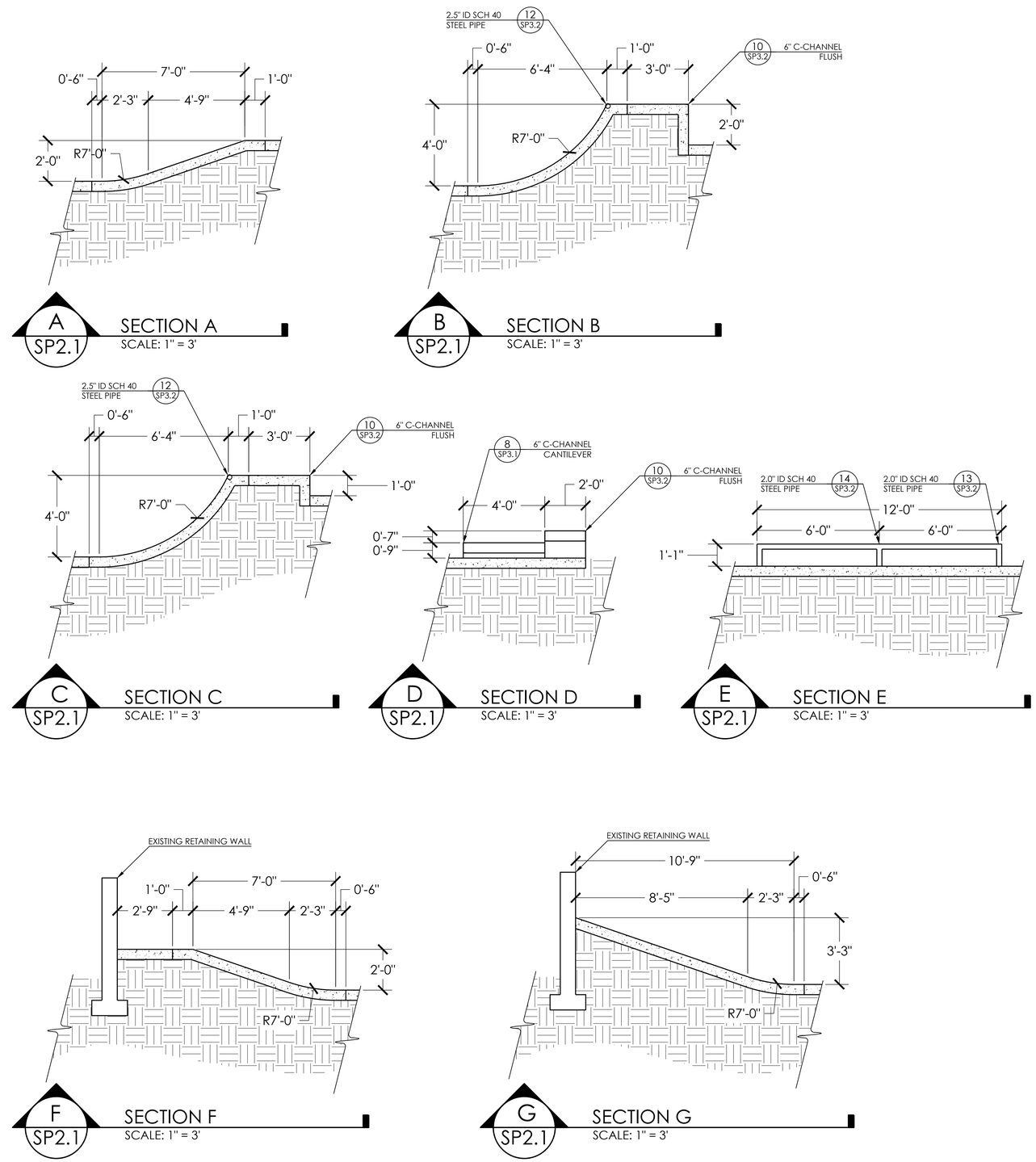

GRINDLINE
CONCRETE SKATEPARK DESIGN & CONSTRUCTION
4619 14th Ave SW
Seattle WA 98106
P. 206.932.6414 F. 206.932.6840
www.grindline.com

STATE OF IDAHO
BRYAN ANTHONY COLE
LA-16718
LICENSED LANDSCAPE ARCHITECT

SCALE: 1" = 3'

SECTIONS AND KEY

PROJECT: KAMIAH SKATEPARK
LOCATION: KAMIAH, ID

SHEET: SP2.1

DATE: 07.25.22

DRAWN BY: BAJ
CHECKED BY: MBF

This design is an instrument of professional service and is the property of Grindline Skateparks Inc. Any use of these plans shall be restricted to the project for which they were prepared.

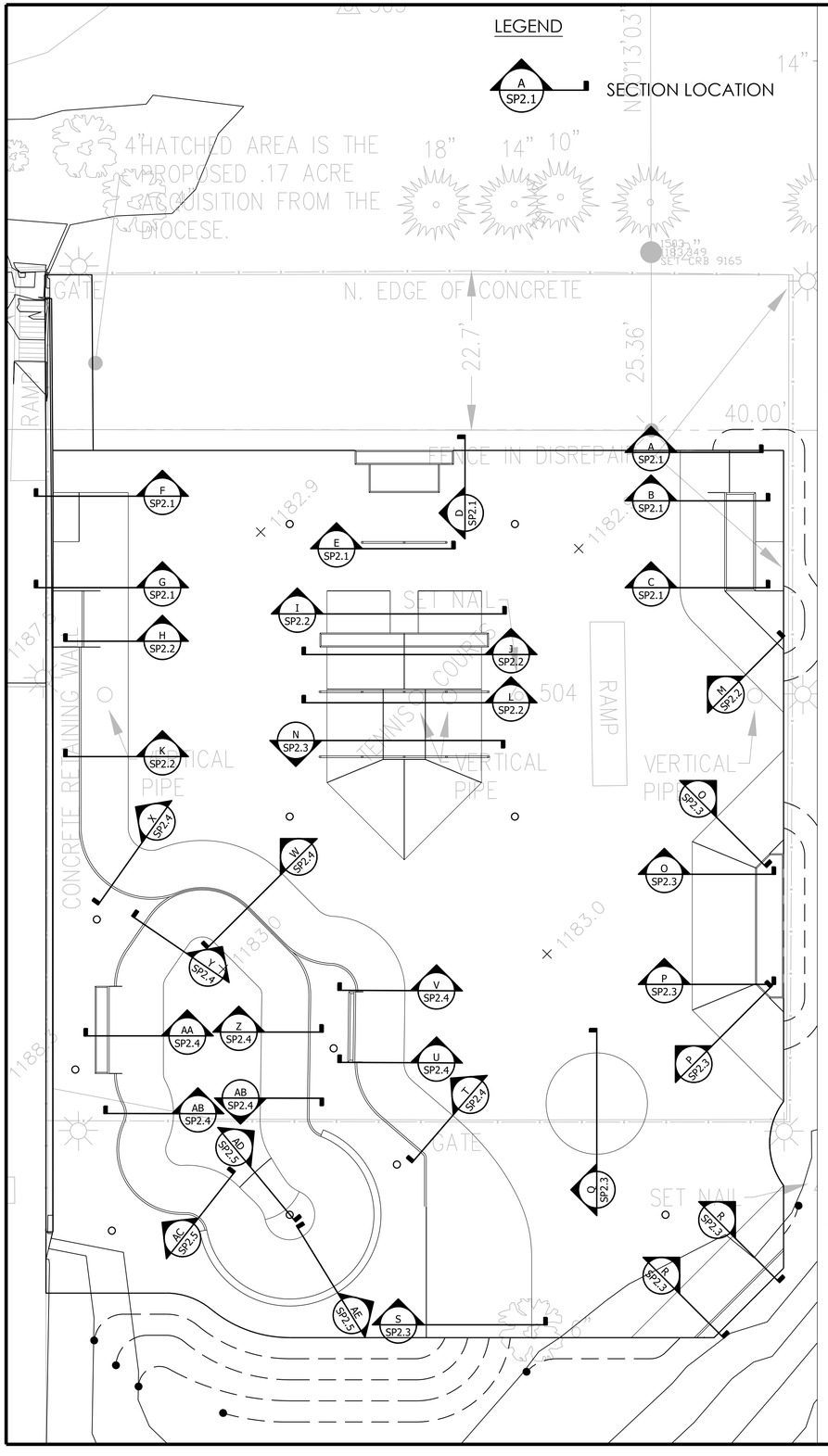

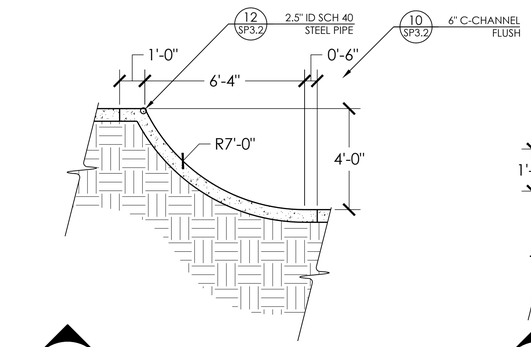

H SP2.2 SECTION H
SCALE: 1" = 3'

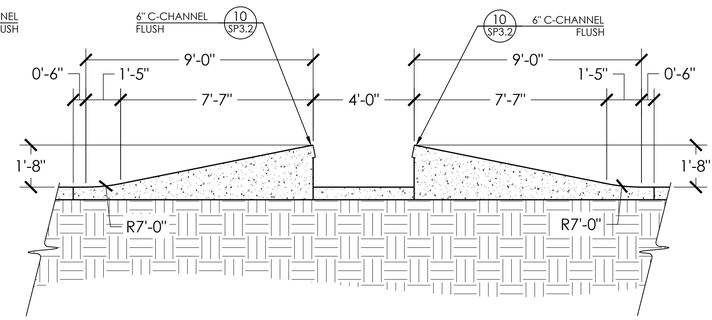

I SP2.2 SECTION I
SCALE: 1" = 3'

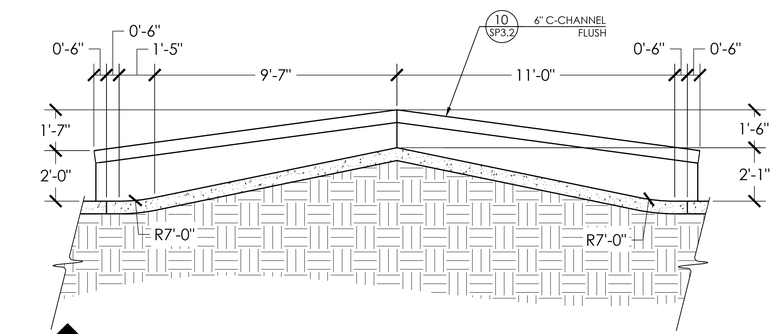

J SP2.2 SECTION J
SCALE: 1" = 3'

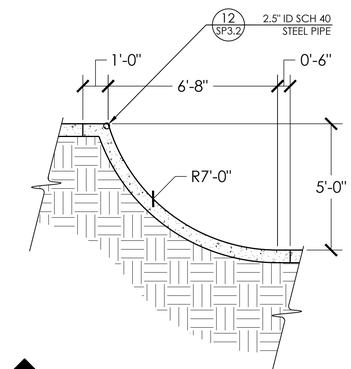

K SP2.2 SECTION K
SCALE: 1" = 3'

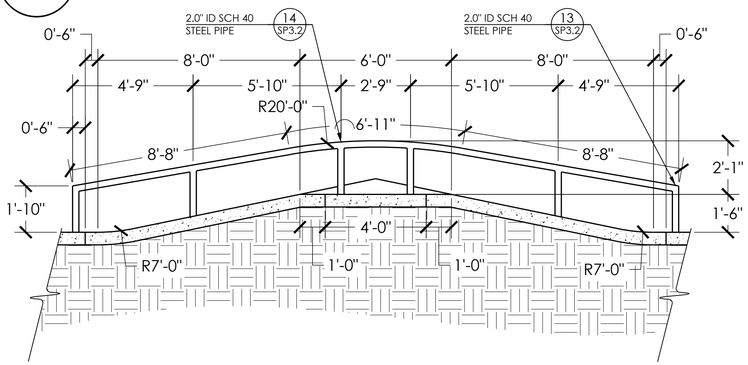

L SP2.2 SECTION L
SCALE: 1" = 3'

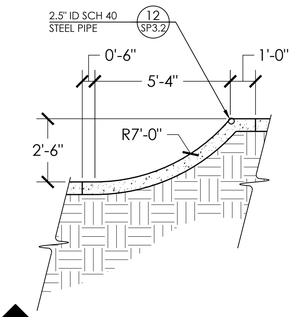

M SP2.2 SECTION M
SCALE: 1" = 3'

GRINDLINE
CONCRETE SKATEPARK DESIGN & CONSTRUCTION
4619 14th Ave SW
Seattle WA 98106
P. 206.932.6414 F. 206.932.6840
www.grindline.com

STATE OF IDAHO
BRYAN ANTHONY CALE
LA-16718
LICENSED LANDSCAPE ARCHITECT

SCALE: 1" = 3'

SECTIONS AND KEY

PROJECT: KAMIAH SKATEPARK
LOCATION: KAMIAH, ID

SHEET: SP2.2

DATE: 07.25.22

DRAWN BY: BAJ
CHECKED BY: MBF

This design is an instrument of professional service and is the property of Grindline Skateparks Inc. Any use of these plans shall be restricted to the project for which they were prepared.

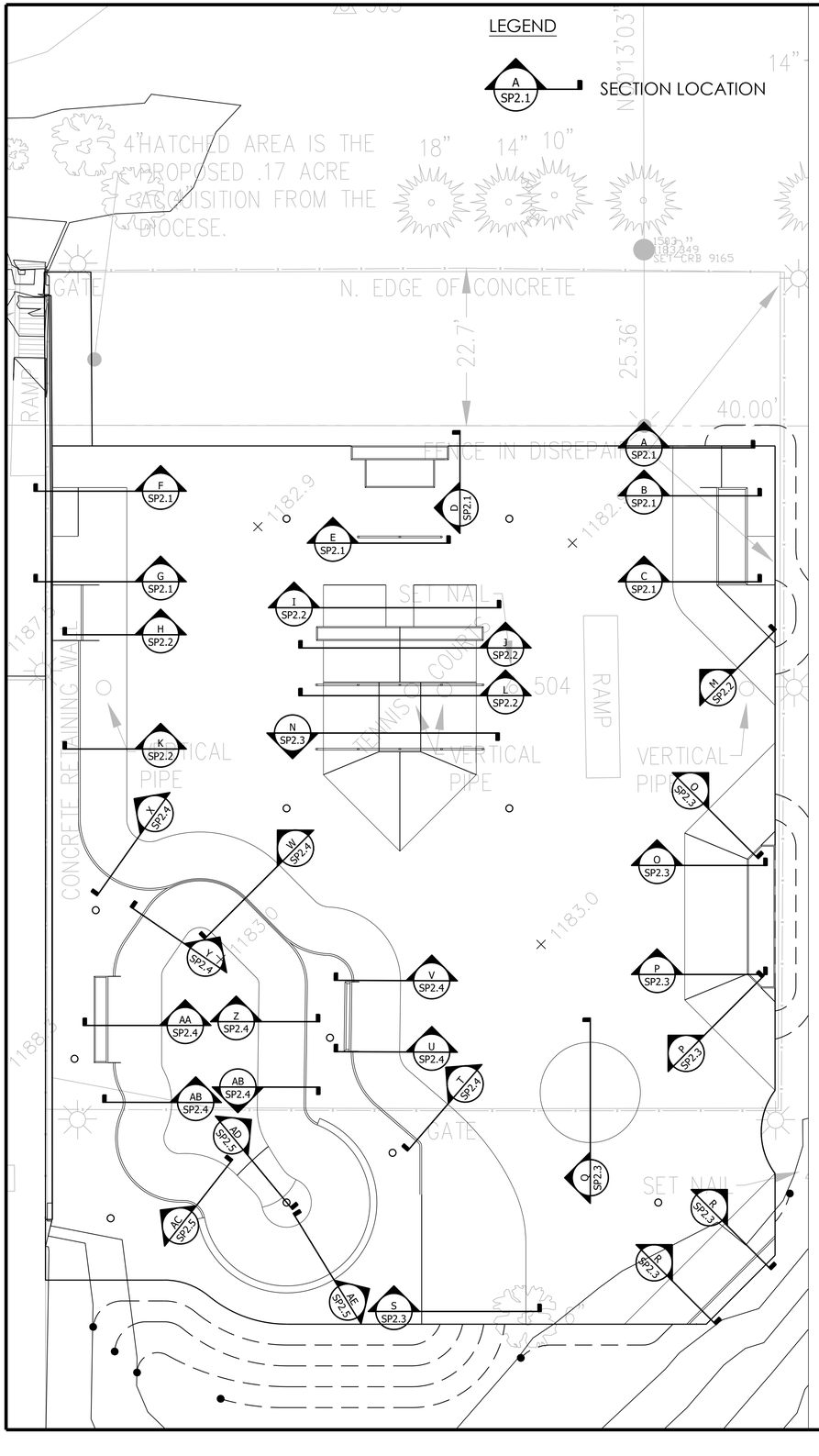

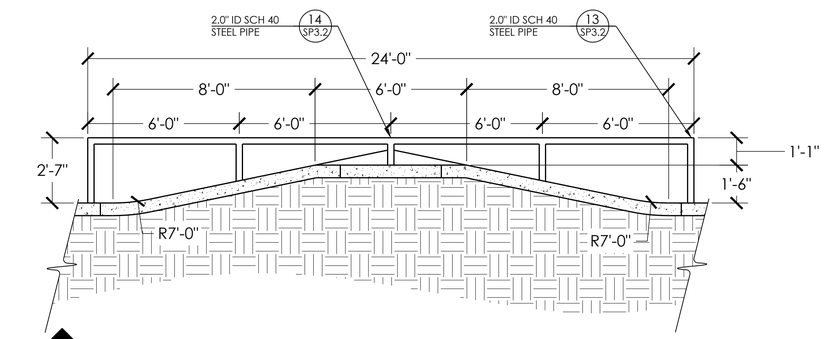

N SP2.3 SECTION N
SCALE: 1" = 3'

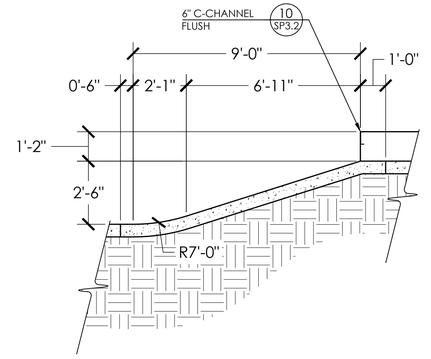

O SP2.3 SECTION O
SCALE: 1" = 3'

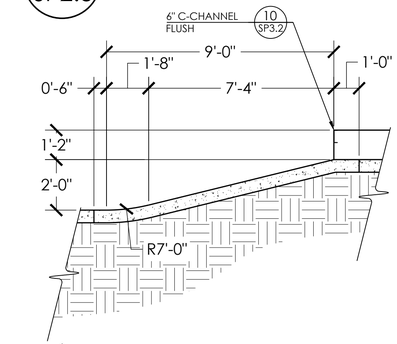

P SP2.3 SECTION P
SCALE: 1" = 3'

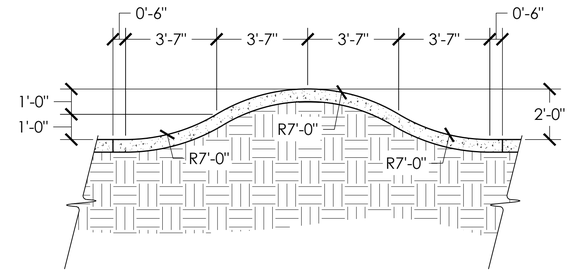

Q SP2.3 SECTION Q
SCALE: 1" = 3'

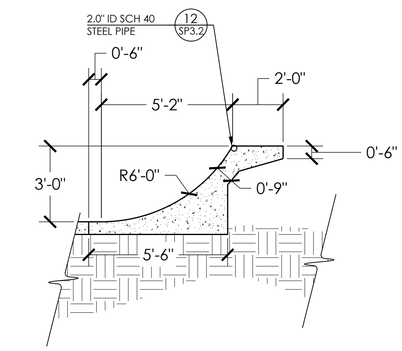

R SP2.3 SECTION R
SCALE: 1" = 3'

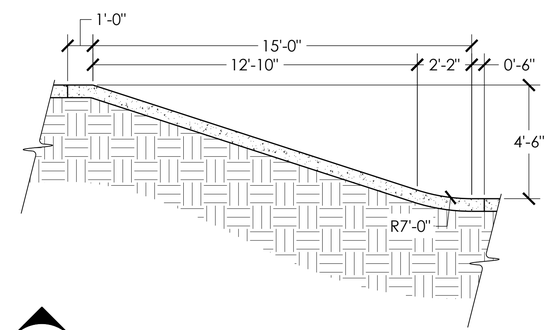

S SP2.3 SECTION S
SCALE: 1" = 3'

GRINDLINE
CONCRETE SKATEPARK DESIGN & CONSTRUCTION
4619 14th Ave SW
Seattle WA 98106
P. 206.932.6414 F. 206.932.6840
www.grindline.com

STATE OF IDAHO
BRYAN ANTHONY CULE
LA-16718
LICENSED LANDSCAPE ARCHITECT

SCALE: 1" = 3'

SECTIONS AND KEY

PROJECT: KAMIAH SKATEPARK
LOCATION: KAMIAH, ID

SHEET: SP2.3

DATE: 07.25.22

DRAWN BY: BAJ
CHECKED BY: MBF

This design is an instrument of professional service and is the property of Grindline Skateparks Inc. Any use of these plans shall be restricted to the project for which they were prepared.

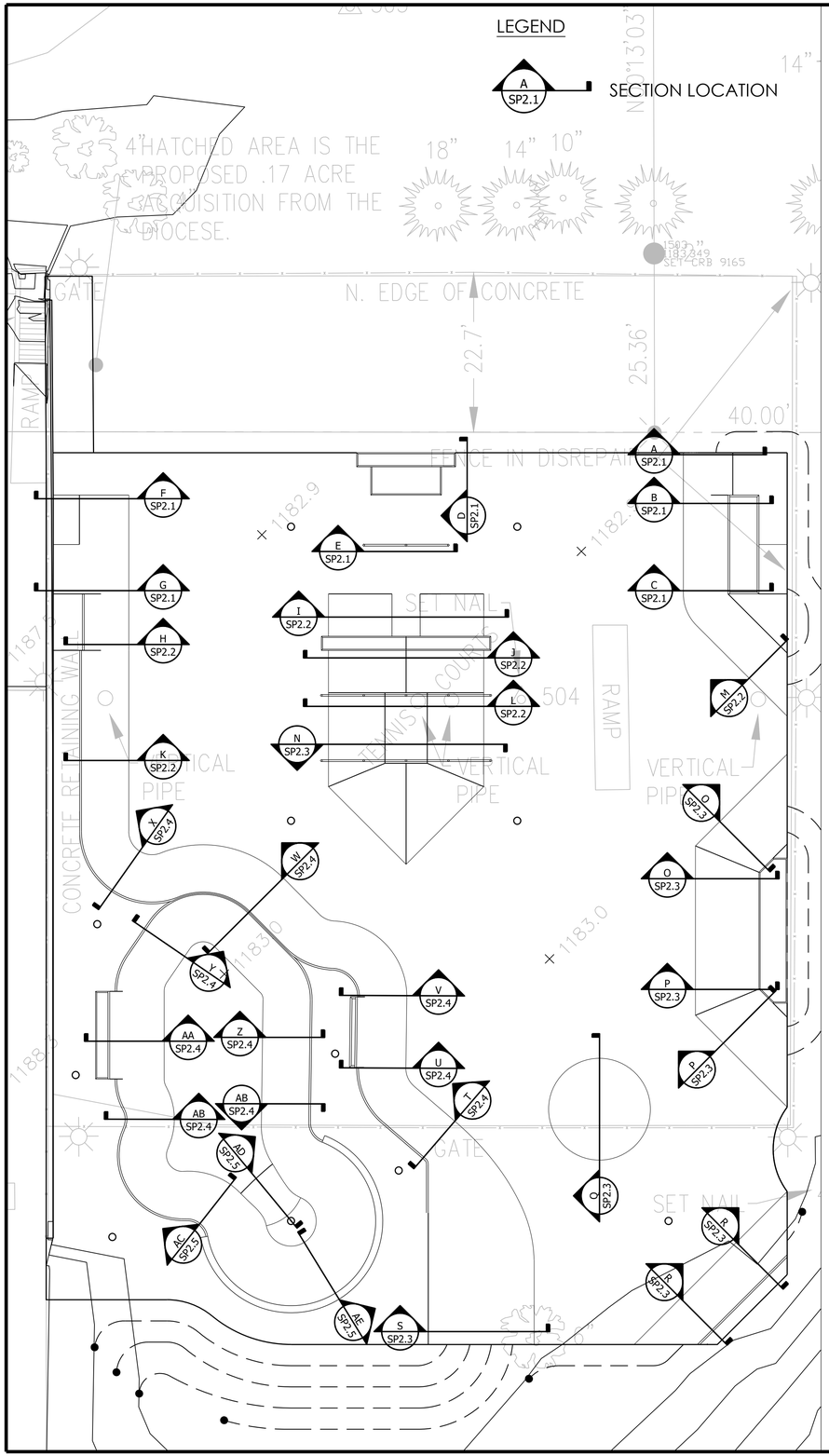

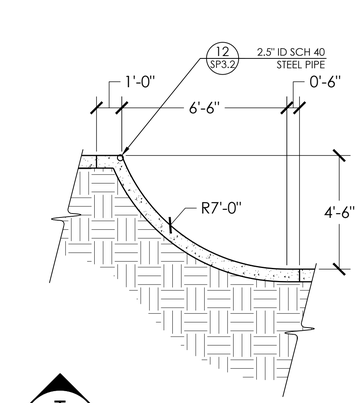

T SP2.4 SECTION T
SCALE: 1" = 3'

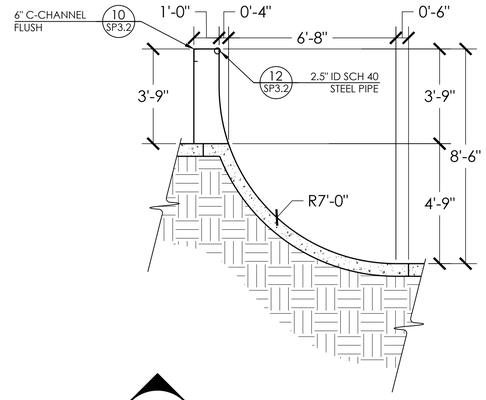

U SP2.4 SECTION U
SCALE: 1" = 3'

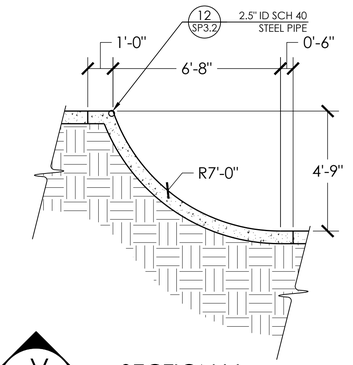

V SP2.4 SECTION V
SCALE: 1" = 3'

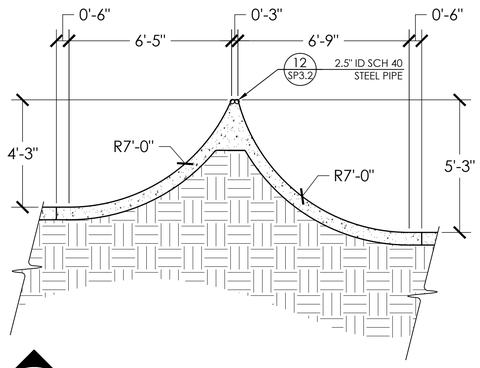

W SP2.4 SECTION W
SCALE: 1" = 3'

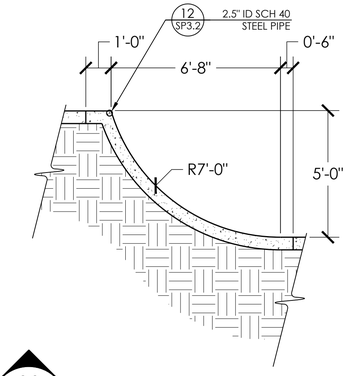

X SP2.4 SECTION X
SCALE: 1" = 3'

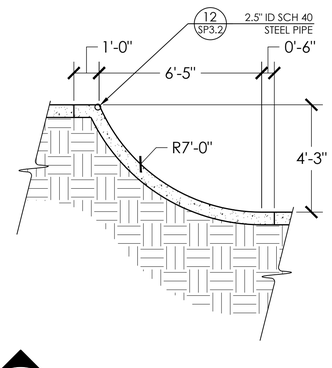

Y SP2.4 SECTION Y
SCALE: 1" = 3'

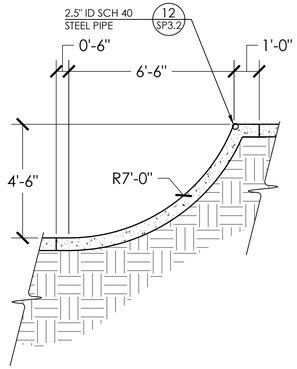

Z SP2.4 SECTION Z
SCALE: 1" = 3'

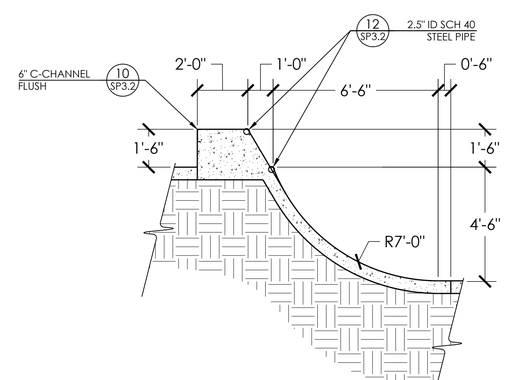

AA SP2.4 SECTION AA
SCALE: 1" = 3'

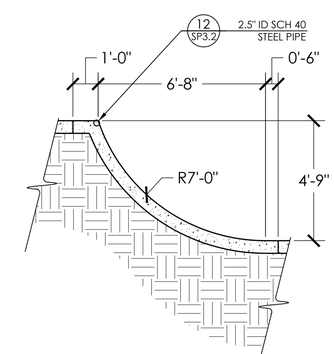

AB SP2.4 SECTION AB
SCALE: 1" = 3'

GRINDLINE
CONCRETE SKATEPARK DESIGN & CONSTRUCTION
4619 14th Ave SW
Seattle WA 98106
P.206.932.6414 F.206.932.6840
www.grindline.com

STATE OF IDAHO
BRYAN ANTHONY COLE
LA-16718
LICENSED LANDSCAPE ARCHITECT

SCALE: 1" = 3'

SECTIONS AND KEY

PROJECT: KAMIAH SKATEPARK
LOCATION: KAMIAH, ID

SHEET: SP2.4

DATE: 07.25.22

DRAWN BY: BAJ
CHECKED BY: MBF

This design is an instrument of professional service and is the property of Grindline Skateparks Inc. Any use of these plans shall be restricted to the project for which they were prepared.

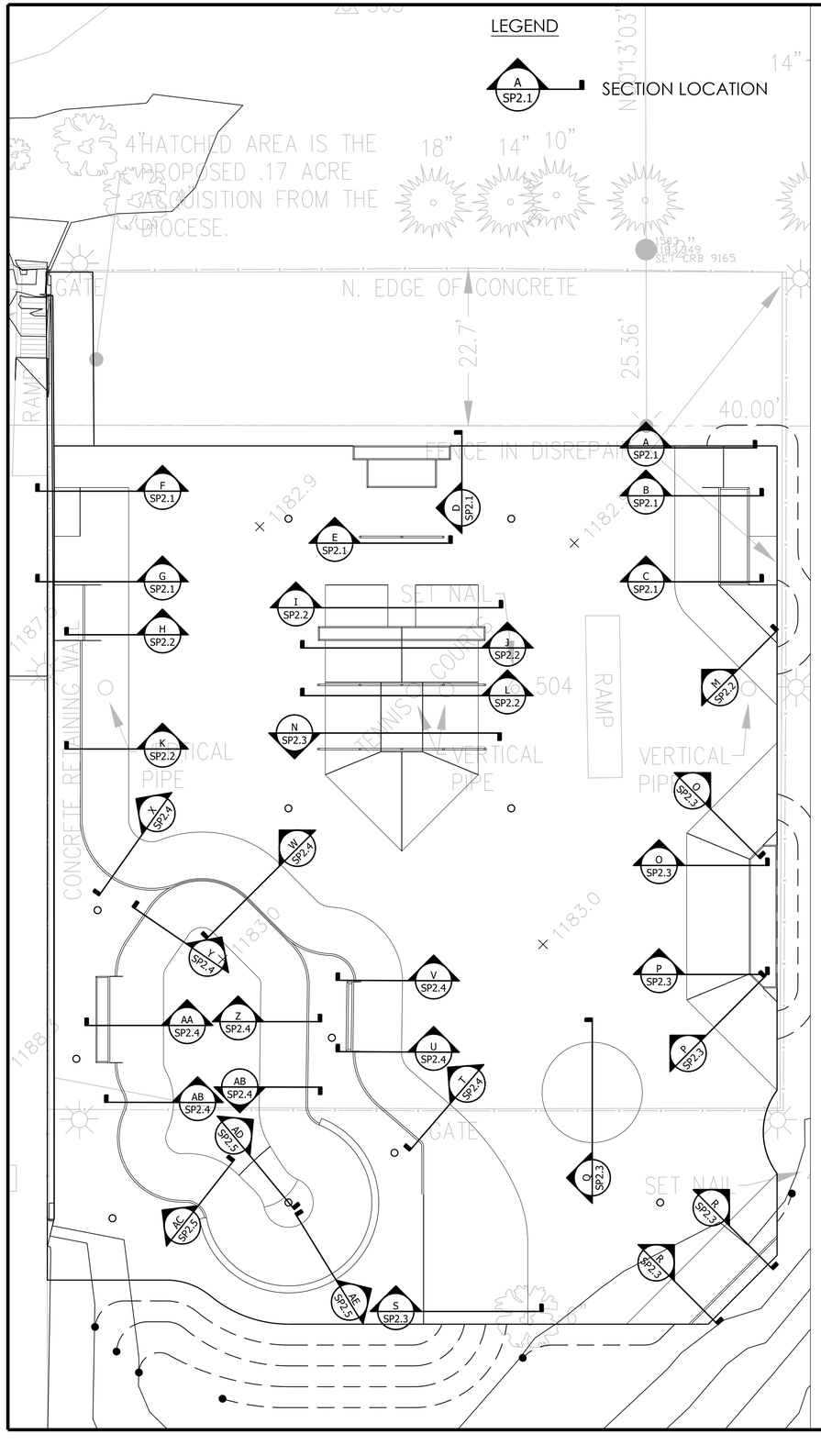

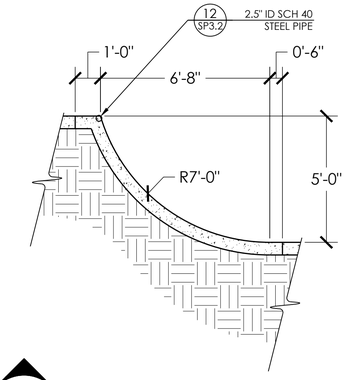

AC SP2.5 SECTION AC
SCALE: 1" = 3'

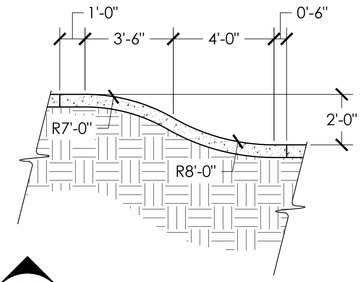

AD SP2.5 SECTION AD
SCALE: 1" = 3'

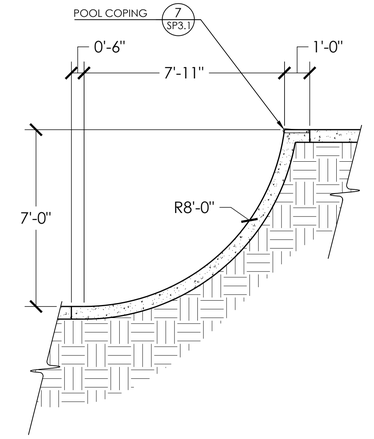

AE SP2.5 SECTION AE
SCALE: 1" = 3'

GRINDLINE
CONCRETE SKATEPARK DESIGN & CONSTRUCTION
4619 14th Ave SW
Seattle WA 98106
P. 206.932.6414 F. 206.932.6840
www.grindline.com

STATE OF IDAHO
BRYAN ANTHONY COLE
LA-16718
LICENSED LANDSCAPE ARCHITECT

SCALE: 1" = 3'

SECTIONS AND KEY

PROJECT: KAMIAH SKATEPARK
LOCATION: KAMIAH, ID

SHEET: SP2.5

DATE: 07.25.22

DRAWN BY: BAJ
CHECKED BY: MBF

This design is an instrument of professional service and is the property of Grindline Skateparks Inc. Any use of these plans shall be restricted to the project for which they were prepared.

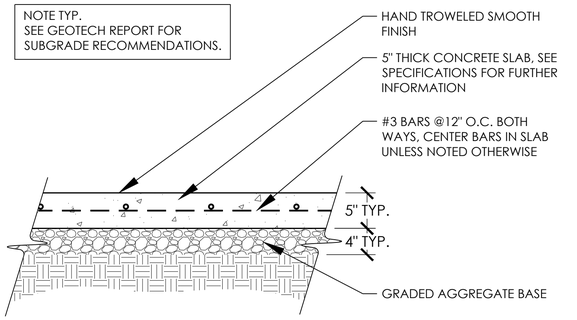

1 SP3.1 CONCRETE SURFACING
NTS

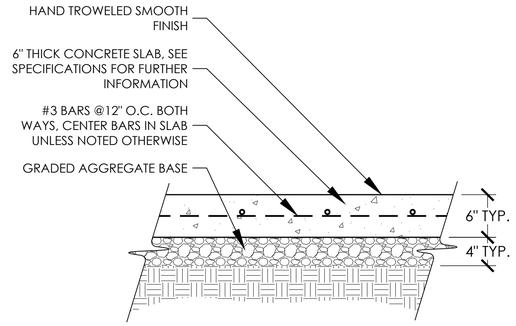

2 SP3.1 SHOTCRETE SURFACING
NTS

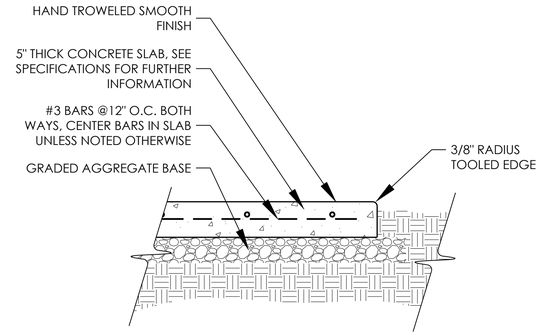

3 SP3.1 CONCRETE EDGE
NTS

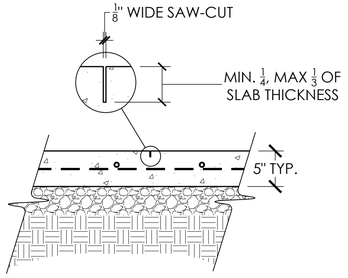

4 SP3.1 SAW-CUT JOINT
NTS

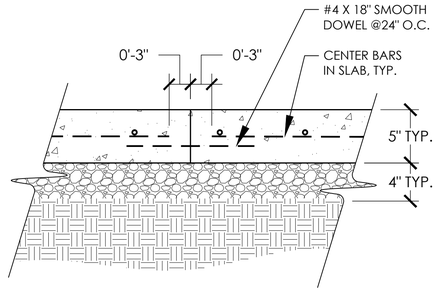

5 SP3.1 CONSTRUCTION JOINT
NTS

ENGINEERING SPECIFICATION: GRINDLINE GL415SS SKATEPARK FLOOR DRAIN, GALVANIZED STEEL BODY WITH BOTTOM OUTLET, STAINLESS STEEL MEDIUM DUTY STRAINER

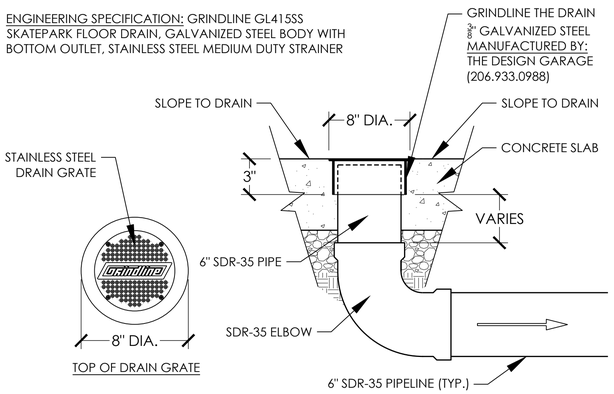

6 SP3.1 GRINDLINE THE DRAIN
NTS

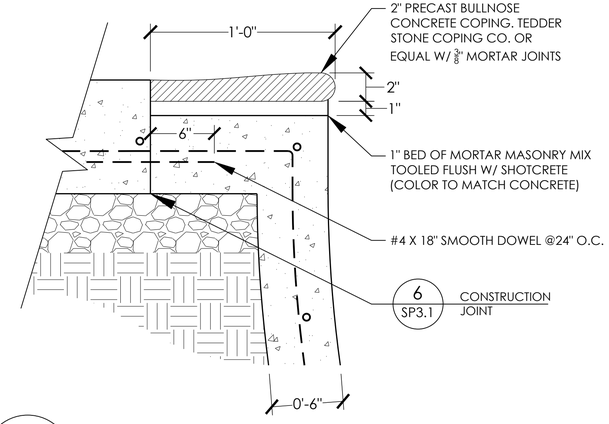

7 SP3.1 POOL COPING & BOND BEAM
NTS

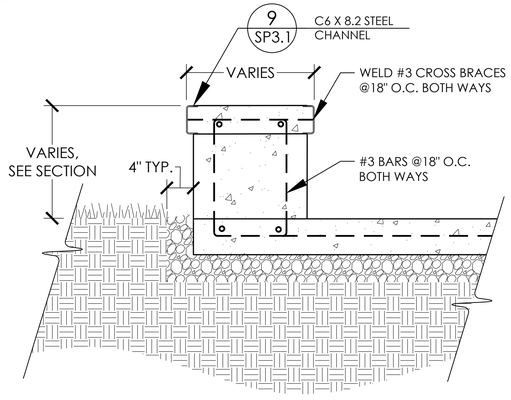

8 SP3.1 REINFORCED CONCRETE LEDGE - CANTILEVER EDGE
NTS

TYPICAL NOTES:
PRIME STEEL WITH WITH RUST-OLEUM INTERIOR/EXTERIOR FLAT PRIMER OR EQUAL BEFORE INSTALLATION.
PAINT EXPOSED STEEL WITH RUST-OLEUM ACRYLIC INTERIOR/EXTERIOR BLACK GLOSS ENAMEL OR EQUAL AFTER INSTALLATION.

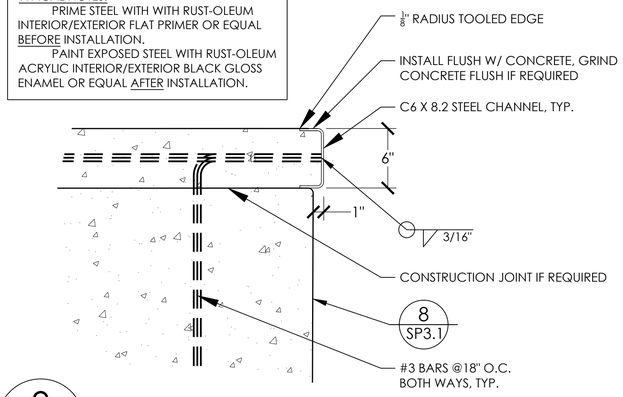

9 SP3.1 STEEL GRIND EDGE - CANTILEVER STEEL CHANNEL
NTS

GRINDLINE
CONCRETE SKATEPARK DESIGN & CONSTRUCTION
4619 14th Ave SW
Seattle, WA 98106
P. 206.932.6441 F. 206.932.6840
www.grindlinc.com

STATE OF IDAHO
BRYAN ANTHONY COLE
LA-16718
LICENSED LANDSCAPE ARCHITECT

SCALE: N.T.S.

DETAILS

PROJECT: KAMIAH SKATEPARK
LOCATION: KAMIAH, ID

SHEET: SP3.1

DATE: 07.25.22

DRAWN BY: BAJ
CHECKED BY: MBF

This design is an instrument of professional service and is the property of Grindline Skateparks Inc. Any use of these plans shall be restricted to the project for which they were prepared.

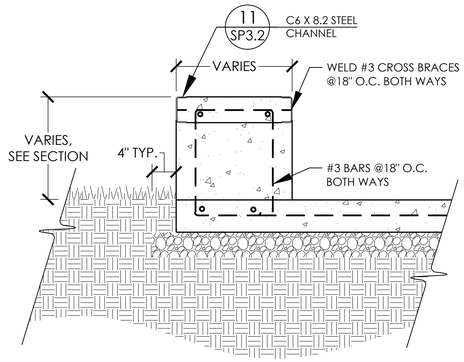

10 SP3.2 REINFORCED CONCRETE LEDGE - FLUSH EDGE
NTS

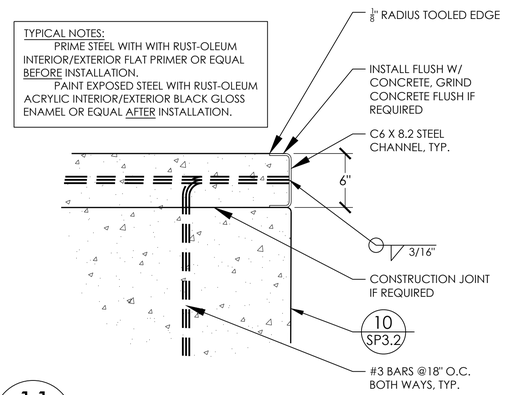
TYPICAL NOTES:
PRIME STEEL WITH WITH RUST-OLEUM INTERIOR/EXTERIOR FLAT PRIMER OR EQUAL BEFORE INSTALLATION.
PAINT EXPOSED STEEL WITH RUST-OLEUM ACRYLIC INTERIOR/EXTERIOR BLACK GLOSS ENAMEL OR EQUAL AFTER INSTALLATION.

11 SP3.2 STEEL GRIND EDGE - FLUSH STEEL CHANNEL
NTS

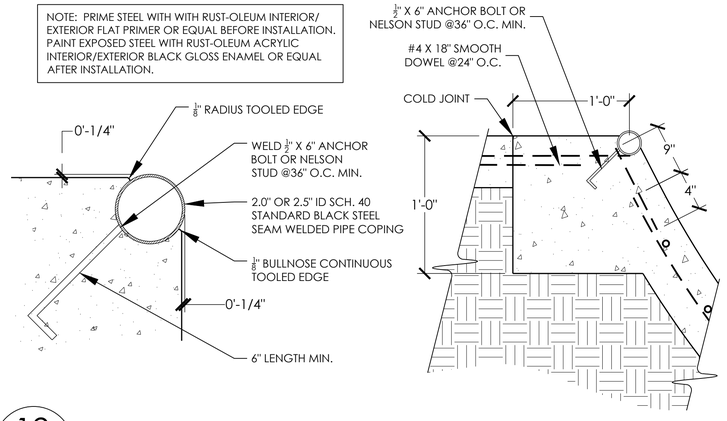
NOTE: PRIME STEEL WITH WITH RUST-OLEUM INTERIOR/EXTERIOR FLAT PRIMER OR EQUAL BEFORE INSTALLATION. PAINT EXPOSED STEEL WITH RUST-OLEUM ACRYLIC INTERIOR/EXTERIOR BLACK GLOSS ENAMEL OR EQUAL AFTER INSTALLATION.

12 SP3.2 STEEL COPING AND BOND BEAM
NTS

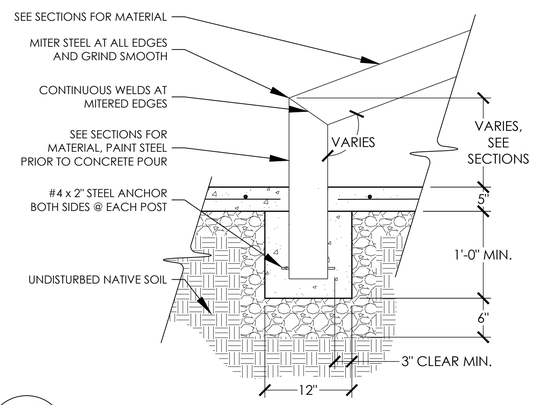

13 SP3.2 HANDRAIL FOOTING - END POST
NTS

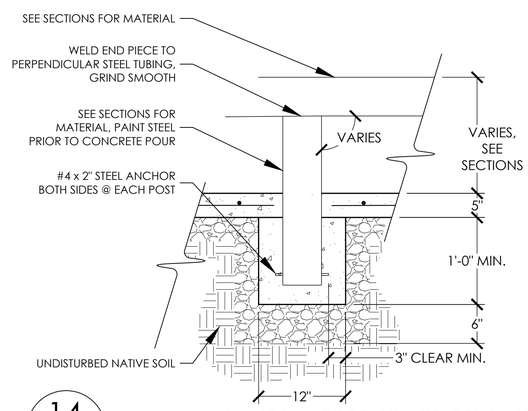

14 SP3.2 HANDRAIL FOOTING - CENTER POST
NTS

GRINDLINE
CONCRETE SKATEPARK DESIGN & CONSTRUCTION
4619 14th Ave SW
Seattle WA 98106
P. 206.932.6414 F. 206.932.6840
www.grindline.com

STATE OF IDAHO
BRYAN ANTHONY COLE
LA-16718
LICENSED LANDSCAPE ARCHITECT

SCALE: N.T.S.

DETAILS

PROJECT: KAMIAH SKATEPARK
LOCATION: KAMIAH, ID

SHEET: SP3.2

DATE: 07.25.22

DRAWN BY: BAJ
CHECKED BY: MBF

This design is an instrument of professional service and is the property of Grindline Skateparks Inc. Any use of these plans shall be restricted to the project for which they were prepared.